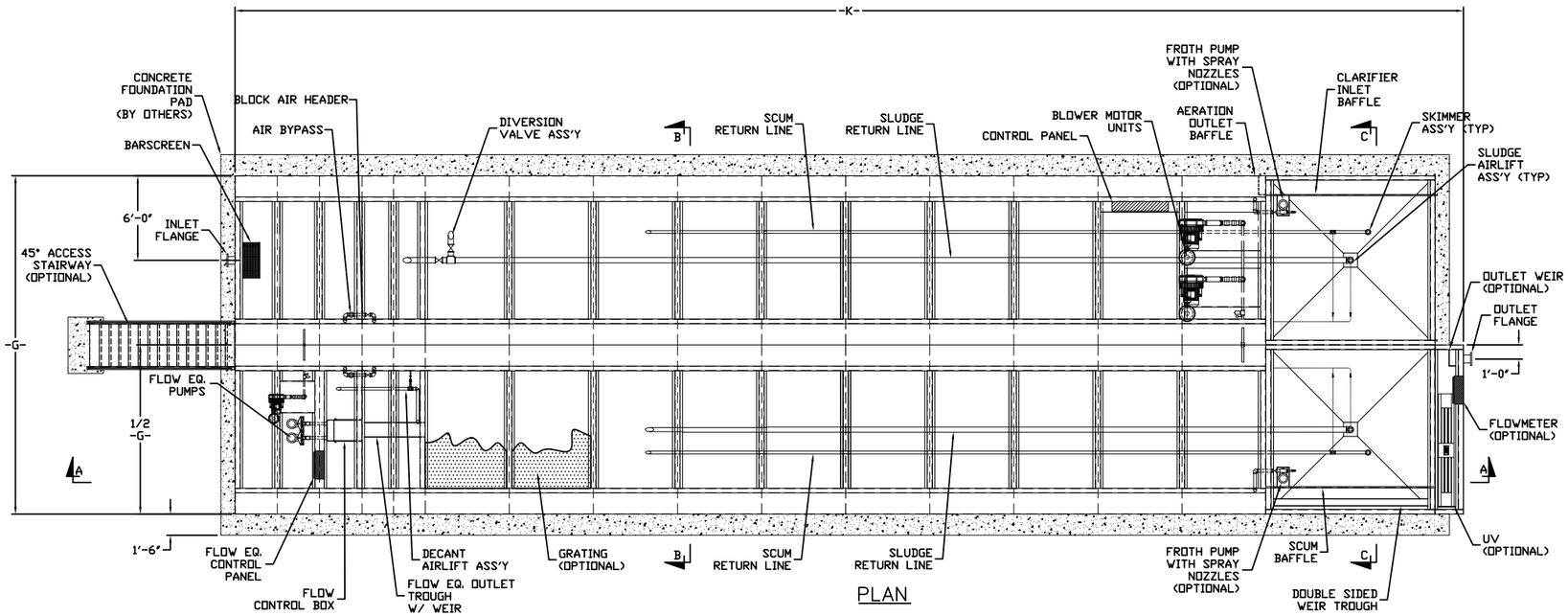


PLAN

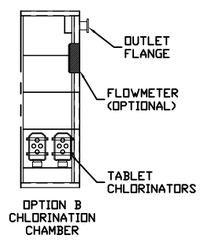


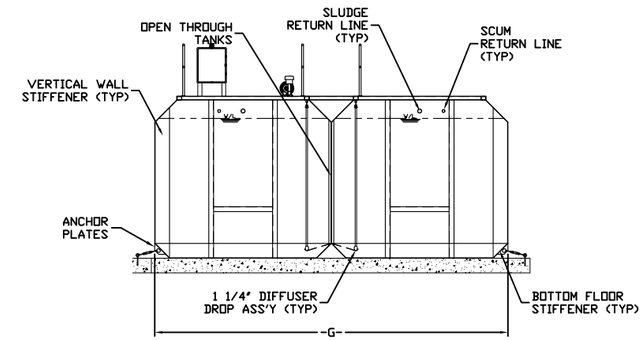


SECTION 'B–B'
AERATION CHAMBER

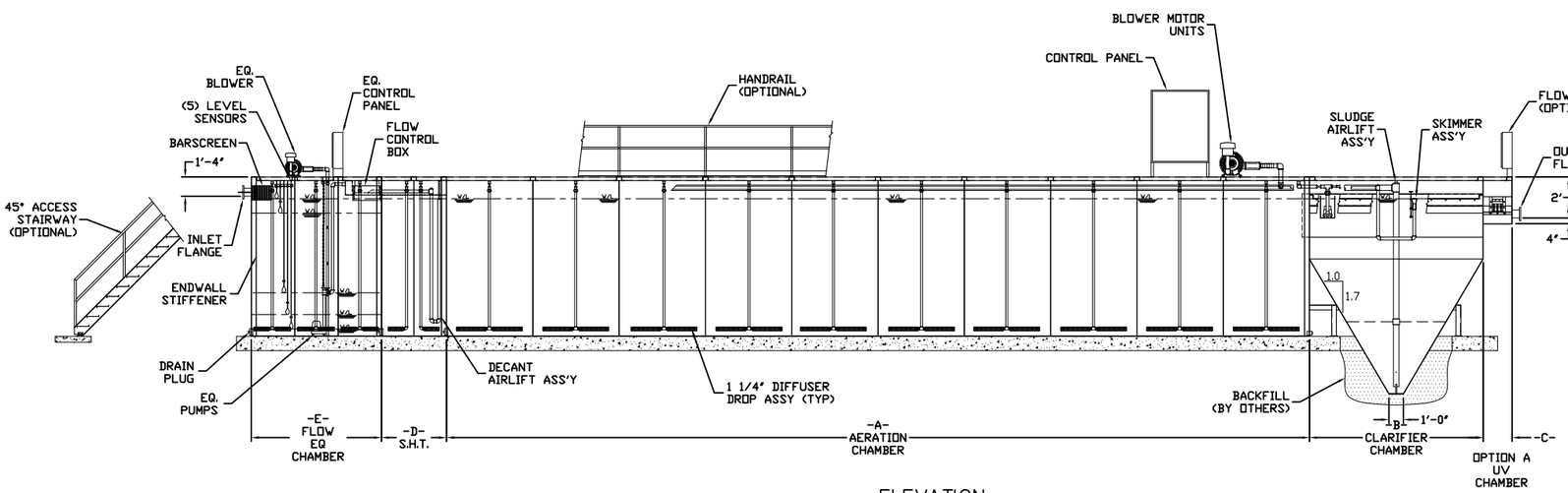


ELEVATION
SECTION 'A–A'

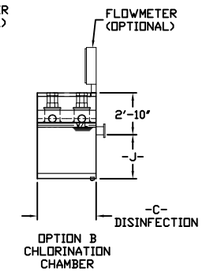


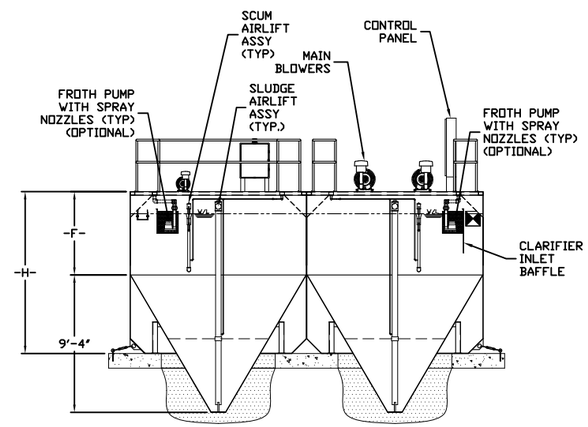


SECTION 'C–C'
CLARIFIER CHAMBER

| MODEL NUMBER | E/A DESIGN FLOW | FLOW EQUILAZITION VOLUME | SLUDGE HOLDING VOLUME = 15 DAY | AERATION VOLUME | CLARIFIER VOLUME | CHLORINATION VOLUME | -A- | -B- | -C- | -D- | -E- | -F- | -G- | -H- | -J- | -K- |
|---|---|---|---|---|---|---|---|---|---|---|---|---|---|---|---|---|
| LEP-60-SUSHC | 60,000 GPD | 19,800 GAL | 6,000 GAL | 60,000 GAL | 10,000 GAL | 1,250 GAL | 35'-10" | 12'-0" | 4'-0" | 3'-6" | 11'-7" | 4'-0" | 24'-0" | 11'-0" | 3'-6" | 66'-11" |
| LEP-65-SUSHC | 65,000 GPD | 21,450 GAL | 6,500 GAL | 65,000 GAL | 10,833 GAL | 1,354 GAL | 38'-9" | 12'-0" | 4'-0" | 3'-10" | 12'-7" | 4'-5" | 24'-0" | 11'-0" | 3'-10" | 71'-2" |
| LEP-70-SUSHC | 70,000 GPD | 23,100 GAL | 7,000 GAL | 70,000 GAL | 11,667 GAL | 1,458 GAL | 41'-9" | 12'-0" | 4'-0" | 4'-2" | 13'-7" | 4'-9" | 24'-0" | 11'-0" | 4'-1" | 75'-6" |
| LEP-75-SUSHC | 75,000 GPD | 24,750 GAL | 7,500 GAL | 75,000 GAL | 12,500 GAL | 1,563 GAL | 44'-9" | 12'-0" | 4'-0" | 4'-6" | 14'-7" | 5'-2" | 24'-0" | 11'-0" | 4'-4" | 79'-10" |
| LEP-80-SUSHC | 80,000 GPD | 26,400 GAL | 8,000 GAL | 80,000 GAL | 13,334 GAL | 1,667 GAL | 47'-9" | 12'-0" | 4'-0" | 4'-10" | 15'-7" | 5'-8" | 24'-0" | 11'-0" | 4'-7" | 84'-2" |
| LEP-85-SUSHC | 85,000 GPD | 28,050 GAL | 8,500 GAL | 85,000 GAL | 14,166 GAL | 1,770 GAL | 49'-11" | 12'-0" | 4'-0" | 5'-2" | 16'-7" | 6'-0" | 24'-0" | 11'-0" | 4'-10" | 87'-8" |
| LEP-90-SUSHC | 90,000 GPD | 29,700 GAL | 9,000 GAL | 90,000 GAL | 15,000 GAL | 1,875 GAL | 52'-10" | 12'-0" | 4'-0" | 5'-6" | 17'-7" | 6'-5" | 24'-0" | 11'-0" | 5'-1" | 91'-11" |
| LEP-95-SUSHC | 95,000 GPD | 31,350 GAL | 9,500 GAL | 95,000 GAL | 15,833 GAL | 1,979 GAL | 55'-9" | 12'-0" | 4'-0" | 5'-10" | 18'-7" | 6'-9" | 24'-0" | 11'-0" | 5'-4" | 96'-2" |
| LEP-100-SUSHC | 100,000 GPD | 33,000 GAL | 10,000 GAL | 100,000 GAL | 16,667 GAL | 2,083 GAL | 58'-8" | 12'-0" | 4'-0" | 6'-2" | 19'-7" | 7'-2" | 24'-0" | 11'-0" | 5'-7" | 100'-5" |


**NOTICE:**
THIS DRAWING HAS NOT BEEN PUBLISHED AND IS THE SOLE PROPERTY OF LEGACY ENVIRONMENTAL PROCESS L.L.C. IT IS LENT TO THE BORROWER FOR HIS CONFIDENTIAL USE ONLY. IN CONSIDERATION OF THIS LOAN, THE BORROWER PROMISES TO RETURN IT UPON REQUEST AND AGREES THAT IT SHALL NOT BE REPRODUCED, COPIED, LENT, OR OTHERWISE DISPOSED OF, DIRECTLY OR INDIRECTLY, NOR USED FOR ANY PURPOSE OTHER THAN THAT FOR WHICH IT IS SPECIFICALLY FURNISHED.


**TOLERANCE UNLESS NOTED:**
ALL DIMENSIONS IN INCHES.
BREAK ALL SHARP EDGES
FRACTIONAL = ± 1/32"
ANGLES = ± 1/2°
DECIMAL .XXX = ± .015
.XX = ± .03, .X = ± .1
MACH. SURFACE 125√ MAX.

| | |
|---|---|
| DRAWN | DATE 4/6/06 |
| CHECKED | DATE 4/6/06 |
| APPROVED | DATE 4/10/06 |
| NEXT ASS'Y | SHEET 1 OF 1 |

www.legacyenvpro.com


**LEGACY ENVIRONMENTAL PROCESS L.L.C.**
1445 Ashville Road, Suite 103 Phone: 205-640-1035
Leeds, AL 35094 U.S.A. FAX: 205-640-1039


TITLE
60,000 – 100,000 GPD PREFABRICATED STEEL SECONDARY TREATMENT SYSTEM STANDARD

| SCALE | DWG. NO. | REV |
|---|---|---|
| NTS | LEP–006 | 0 |
| CUSTOMER STD. | | |